44.Wiper and Washer System (Front)

A: SCHEMATIC

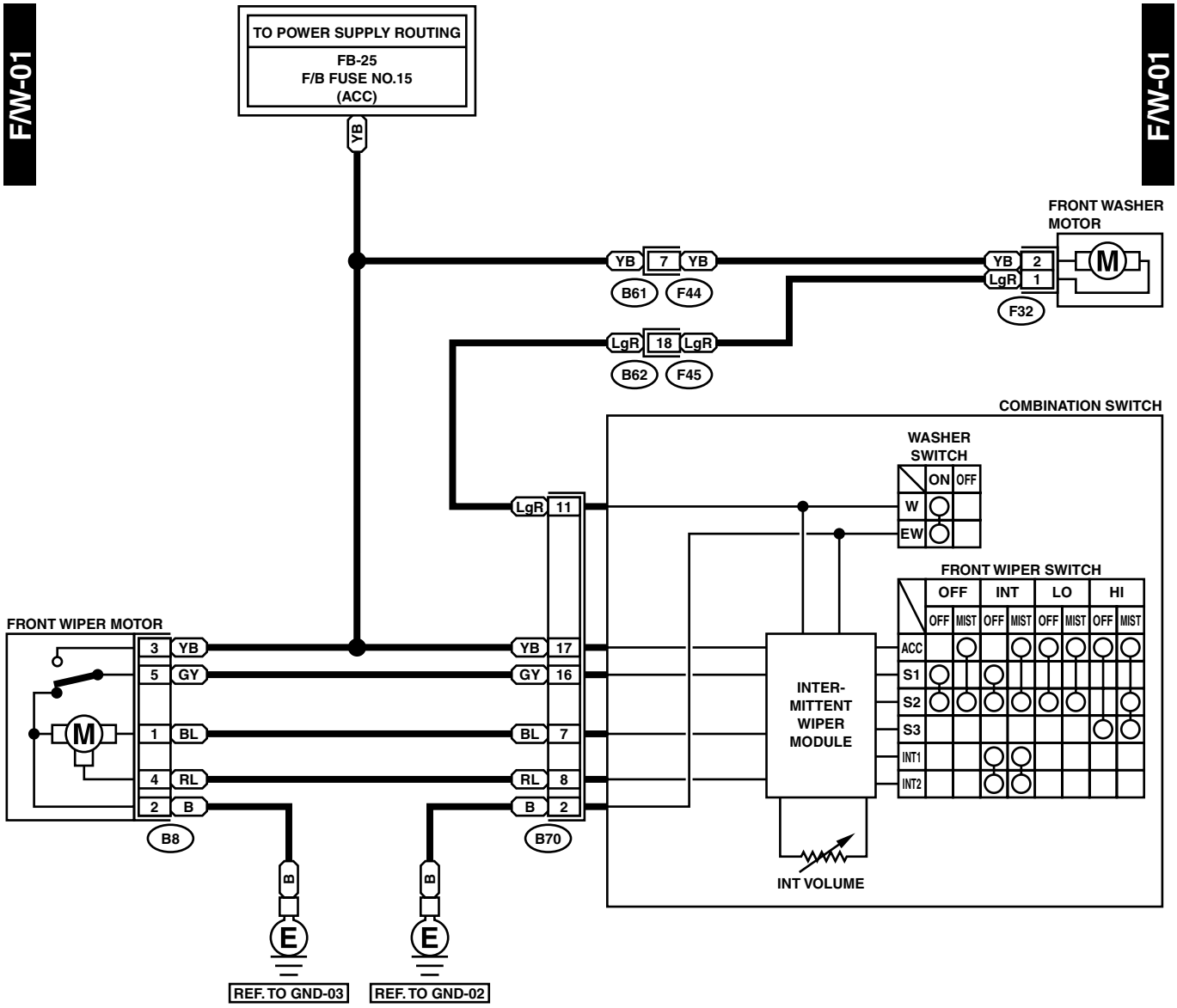

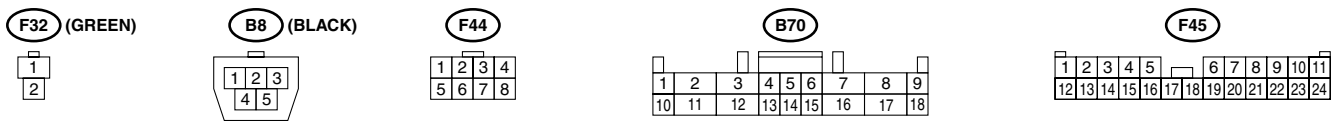

WI-02515